General Information

about

GÄBLER-PISTON SLIDE VALVE COMBINATIONS

1. Introduction

GÄBLER-piston valve combinations consist of two single shut-off valves that are assembled in line and a small vent valve to vent the space in between. Units that are falling under the range of validity of the European Pressure Equipment Directive 2014/68/EU bear the stamped CE sign with the number of the Notified body.

GÄBLER-piston slide valve combinations are used as a safety double quick shut-off valve. If a leakage in the valve seat would be highly dangerous for either the process or for the working staff a double block-and-bleed design prevents that medium is flowing to the valve even is there's smaller seat leakage at one of the valves. Another field of application is to use combinations in order seperate different media. Such installations are for example systems, where nitrogen is blown into an oxygen pipeline in order to prevent an ignition or as slag-splashing installations or in integrated steel plants to blow oxygen into the blast-furnace wind.

It is usually recommended to assemble the two main valves with their flow indication arrows showing towards each other, to shut tight in both directions of flow at any pressure difference.

2. Main components of GÄBLER piston slide valve combinations

Item	quantity	designation
1	1	main shut-off valve
2	1	main shut-off valve – turned by 180° against the direction of flow in order to shut tight in both flow directions
3	1	vent valve for the deaeration of the volume between 1 and 2
4	1 or 2	3/2-directional -solenoid valves as a pilot valve for the main valves
5	1	3/2-directional solenoid valve for the control of the vent valve (for piston slide valve combinations up to DN 50 all three valves can be actuated with a joint solenoid valve)
6	1 or 2	small piston valve GKS 200 G ½" to enable the insulation of the control pipe for maintenance purposes or as optional test connection
7	1 or 2	pressure governor for the regulation of the time which is required for spring actuated operation to reach the safety position
8	0 or 2	quick venting valve for a further reduction of the valve travel time

Gäbler Armaturen GmbH & Co. KG, Amtsgericht Hildesheim, HRA 100774 · USt.-IdNr.: DE 200517494 Homepage: http: //www.gaebler-armaturen.de
Persönlich haftender Gesellschafter: F. Ehlers Verwaltungs GmbH, Amtsgericht Hildesheim, HRB 101250 Geschäftsführer : Fabian Ehlers, Dierk Hasemann
Hausanschrift Telefon Telefax E-mail : mail@gaebler-armaturen.de Website: www.gaebler-armaturen.de
Gaußstraße 2 +49 (0) 5171 3322 +49 (0) 5171 12866
31224 Peine +49 (0) 5171 767392-0 +49 (0) 5171 76739-29

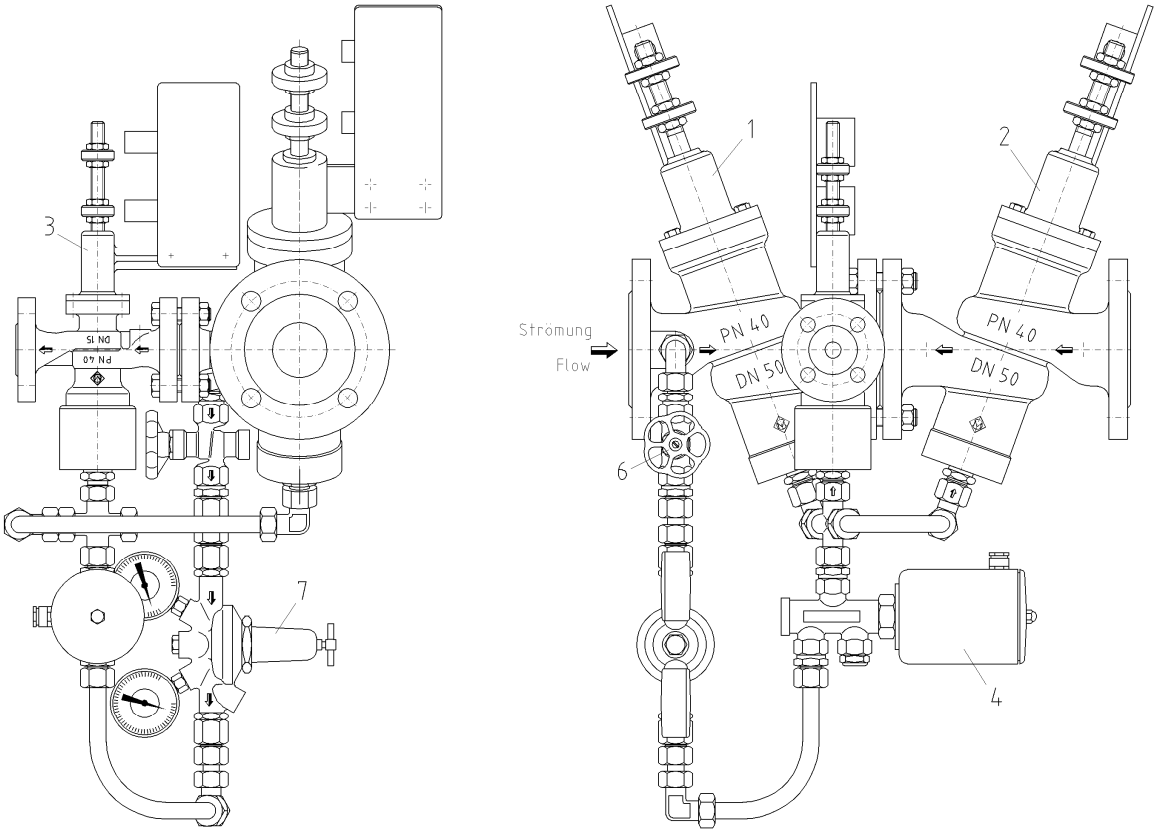

Piston slide valve combination DN 50 GKV 465 with deaeration piston valve DN 15 GKV 475

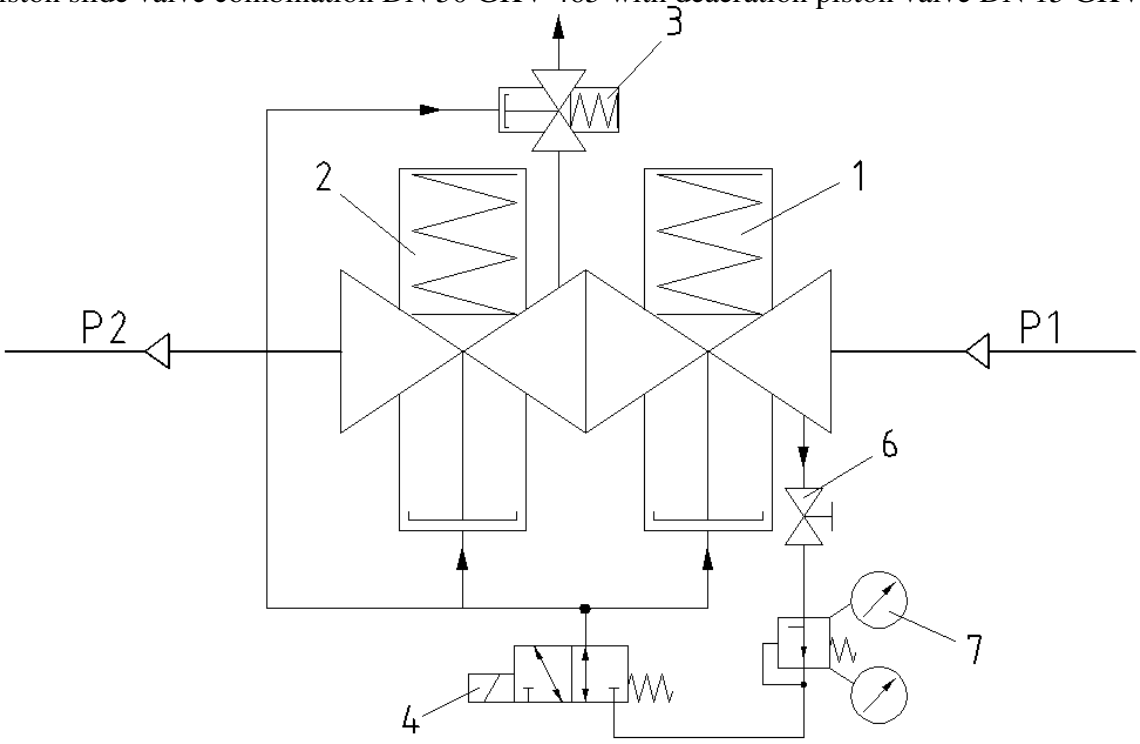

Gäbler Armaturen GmbH & Co. KG, Amtsgericht Hildesheim, HRA 100774 · USt.-IdNr.: DE 200517494 Homepage: http: //www.gaebler-armaturen.de
Persönlich haftender Gesellschafter: F. Ehlers Verwaltungs GmbH, Amtsgericht Hildesheim, HRB 101250 Geschäftsführer : Fabian Ehlers, Dierk Hasemann
Hausanschrift Telefon Telefax E-mail : mail@gaebler-armaturen.de Website: www.gaebler-armaturen.de
Gaußstraße 2 +49 (0) 5171 3322 +49 (0) 5171 12866
31224 Peine +49 (0) 5171 767392-0 +49 (0) 5171 76739-29

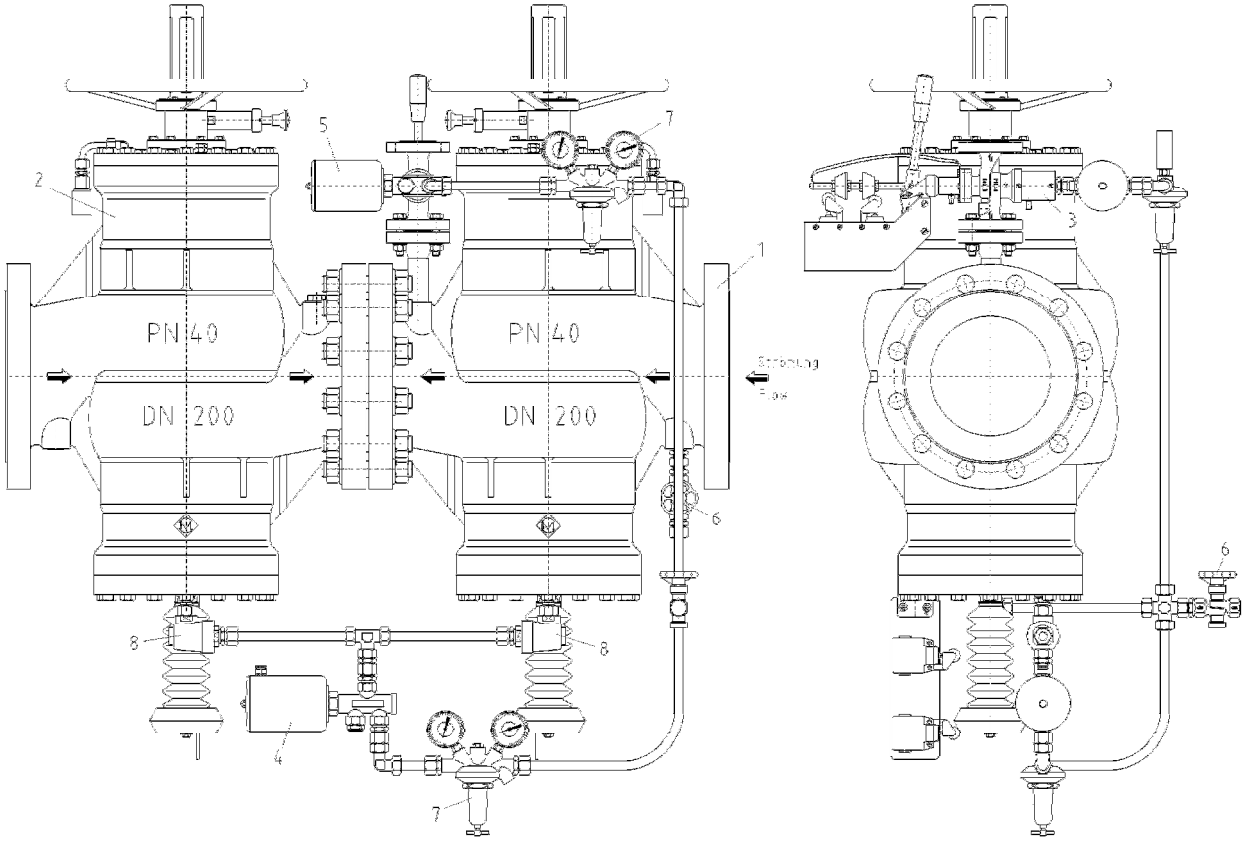

Piston valve combination DN 200 GKV 660 with deaeration piston valve DN 20 GKV 472

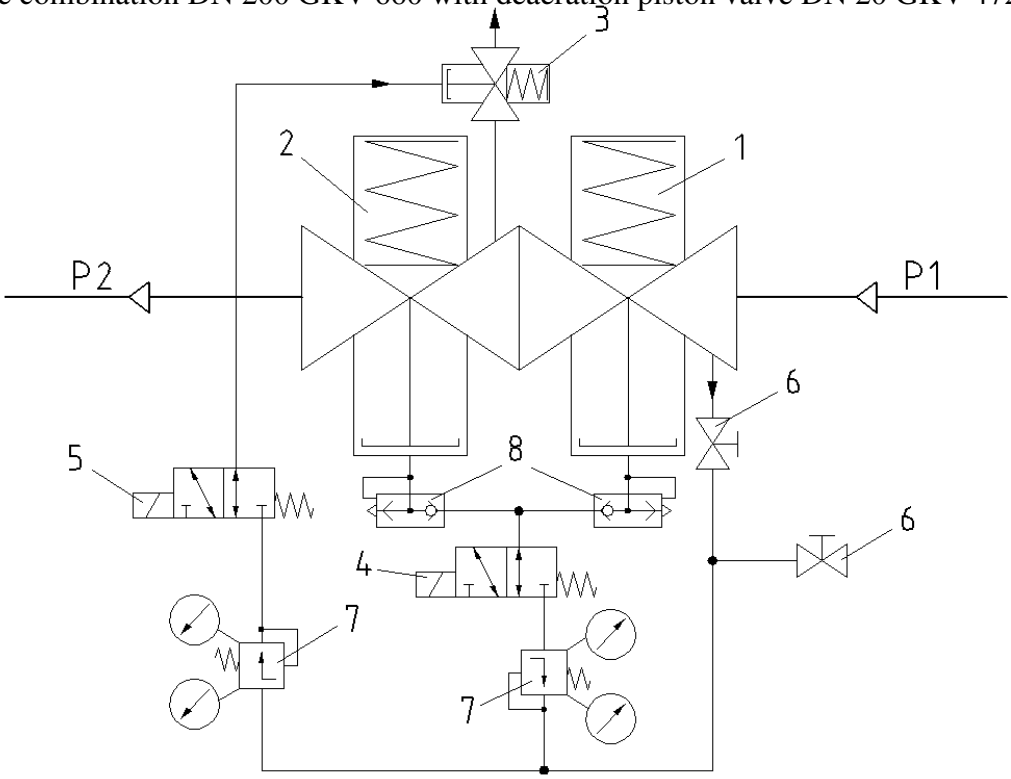

Gäbler Armaturen GmbH & Co. KG, Amtsgericht Hildesheim, HRA 100774 · USt.-IdNr.: DE 200517494 Homepage: http: //www.gaebler-armaturen.de
Persönlich haftender Gesellschafter: F. Ehlers Verwaltungs GmbH, Amtsgericht Hildesheim, HRB 101250 Geschäftsführer : Fabian Ehlers, Dierk Hasemann
Hausanschrift Telefon Telefax E-mail : mail@gaebler-armaturen.de Website: www.gaebler-armaturen.de
Gaußstraße 2 +49 (0) 5171 3322 +49 (0) 5171 12866
31224 Peine +49 (0) 5171 767392-0 +49 (0) 5171 76739-29

3. Wiring and Solenoid Valves

General speaking, the soleniod valves should be wired in a way, that in case of a failure of power supply the piston slide valve combination is switching into its fail position. Further on it should be impossible to open the deaeration valve while the main valves are open to avoid venting of the pipeline medium while the main valves are not closed yet.

If one of the reasons to use double block-and-bleed valves is to improve the safety downstream and to make absolutely sure that no medium is flowing through the pipeline even if one valve would be leaking in the valve seat it is recommended to use separate 3/2-directional solenoid valves for each valve. In that case even if one of the solenoid valves would get stuck the other main valve would close the pipeline. If one of the solenoids of the 3/2-directional valves would burn short the pipeline would be blocked.

If the main focus for the piston slide valve combination is to have an increased reliability for the supply with the gaseous medium it is recommended using two 3/2-directional solenoid valves in redundant design for the joint operation of the two main valves. In that case the short circuit of a solenoid would influence the gas supply.

GÄBLER Piston Slide Valve Combinations are available as manually operated valves for increased security against leakage for major pipeline sections or as spring-opened valves e.g. in emergency systems where nitrogen is purged into explosion hazardous areas or into a hot oxygen turbo-compressor to prevent an ignition.

Peine, June 2014

Gäbler Armaturen GmbH & Co. KG, Amtsgericht Hildesheim, HRA 100774 · USt.-IdNr.: DE 200517494 Homepage: http: //www.gaebler-armaturen.de
Persönlich haftender Gesellschafter: F. Ehlers Verwaltungs GmbH, Amtsgericht Hildesheim, HRB 101250 Geschäftsführer : Fabian Ehlers, Dierk Hasemann
Hausanschrift Telefon Telefax E-mail : mail@gaebler-armaturen.de Website: www.gaebler-armaturen.de
Gaußstraße 2 +49 (0) 5171 3322 +49 (0) 5171 12866
31224 Peine +49 (0) 5171 767392-0 +49 (0) 5171 76739-29